Dinel®

INSTRUCTION MANUAL

CAPACITIVE LEVEL METER CLM–36

Read carefully the instructions published in this manual before the first use of the level meter. Keep the manual at a safe place. The manufacturer reserves the right to implement changes without prior notice.

Content

1. Basic description 4
2. Areas of application 4
3. Sensor variants 5
4. Dimensional drawings 6
5. Effect of tank shape on the linearity of the measurement 8
6. Commissioning procedure 9
7. Mechanical assembly 9
8. Electrical connection 12
9. Preparing the level meter for measurement 14
10. Settings 15
11. Method of marking 17
12. Examples of correct labeling 18
13. Accessories 18
14. Protection, safety, compatibility and explosion proof 18
15. Use, operation and maintenance 19
16. General warranty conditions 21
17. Labeling 22
18. Technical parameters 24
19. Relative permittivity table 28
20. Relative permittivity table 29

Symbols used

To ensure the maximum safety of management processes, we have defined the following safety and information guidelines. Each instruction is marked with a corresponding pictogram.

Alert, warning, danger

This symbol informs you about particularly important instructions for installation and operation of equipment or dangerous situations that may occur during the installation and operation. Not observing these instructions may cause disturbance, damage or destruction of equipment or may cause injury.

Information

This symbol indicates particularly important characteristics of the device.

Note

This symbol indicates helpful additional information.

Safety

All operations described in this instruction manual have to be carried out by trained personnel or by an accredited person only. Warranty and post warranty service must be exclusively carried out by the manufacturer.

Improper use, installation or set-up of the sensor can lead to crashes in the application.

The manufacturer is not responsible for improper use, loss of work caused by either direct or indirect damage, and for expenses incurred at the time of installation or during the period of use of the level sensors.

1. Basic description

CLM® capacitive level meters are designed for continuous level measurement of liquid and bulk solids in tanks, storage tanks, silos, etc. They consist of a housing with removable electronics and a measuring electrode. The electronic part converts the capacitance value into a current signal (4 ... 20 mA) or a voltage signal (0 ... 10 V). The sensitivity can be adjusted, the initial capacitance can be compensated and the amplification can be changed continuously.

The level meters are available in the following versions: N - for non-explosion hazardous areas, NT - high temperature version for non-explosion hazardous areas, Xi - intrinsically safe version for explosion hazardous areas, XiT - high temperature version for explosion hazardous areas. CLM are offered in variants with different types of process connection (threaded, Tri-Clamp).

2. Range of application

Capacitive level meters are suitable for continuous level measurement of a wide variety of liquids and bulk materials. The level meters are resistant to all changes in the atmosphere above the surface (vacuum, overpressure, vapour, dust).

3. Variants of sensors

- **CLM–36_–10** **Non-insulated rod electrode**, for measuring the level of electrically non-conductive liquids (oil, diesel, gasoline) and bulk solid materials (flour, sand, cement, plastic granules, etc.).
  Electrode length from 0.2 m to 5 m (for materials with low permittivity εr <10, the minimum electrode length is 0.5 m).
- **CLM–36_–11** **Insulated rod electrode (PFA)**, suitable for measuring the level of water and other electrically conductive liquids. Also suitable for contaminated liquids in metal tanks, concrete pits, etc.
  Electrode length from 0.2 m to 3 m.
- **CLM–36_–12** **Insulated rod electrode (FEP)**, suitable for measuring the level of water and other electrically conductive liquids. Also suitable for contaminated liquids in metal tanks, concrete pits, etc.
  Electrode length from 0.2 m to 3 m.
- **CLM–36_–20** **Non-insulated rod electrode with reference tube**, to measure the level of unpolluted and electrically non-conductive liquids (oil, diesel, gasoline).
  Electrode length from 0.2 m to 3 m.
- **CLM–36_–22** **Insulated rod electrode with reference tube**, for measuring the level of clean electrically conductive liquids (e.g. in plastic and glass tanks) and for greater demands on measurement accuracy. Electrode insulation made of FEP material. Electrode length from 0.2 m to 3 m.
- **CLM–36_–30** **Non-insulated stainless steel rope electrode and weights**, for measuring the level of loose materials (sand, flour, cement, etc.) Possibility of shortening the rope. Electrode length from 1 m to 20 m.
- **CLM–36_–31** **Non-insulated stainless steel rope electrode and insulated dynamic anchorage**, to measure the level of bulk materials in higher silos.
  Electrode length from 1 m to 20 m.
- **CLM–36_–32** **Insulated rope electrode (FEP) with insulated weight (FEP)**, designed to measure the level of electrically conductive and non-conductive liquids.
  Electrode length from 1 m to 15 m.

4. Dimensional drawings

CLM–36_–10, 11, 12

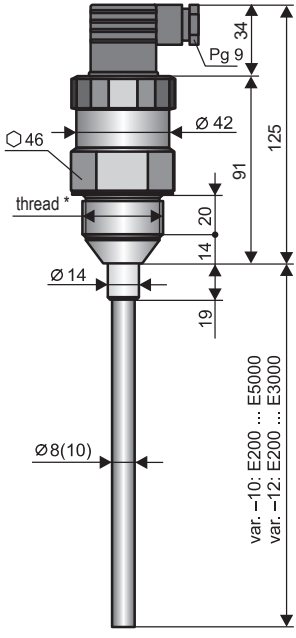

CLM–36_–20, 22

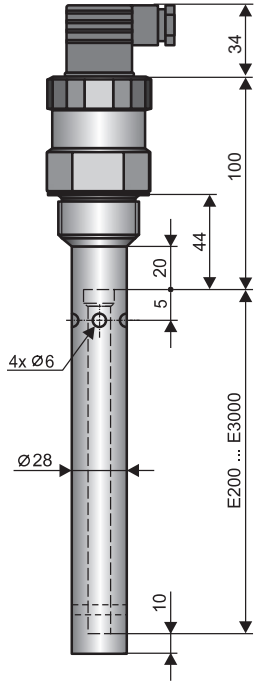

CLM–36_–30

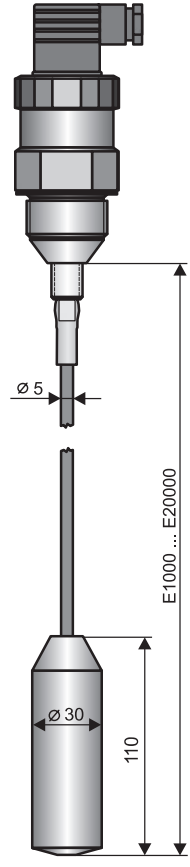

** thread types: M36x2; G1"*

*** for materials with low permittivity (εr <10) is minimum electrode length E500*

high temperature design
CLM–36_T

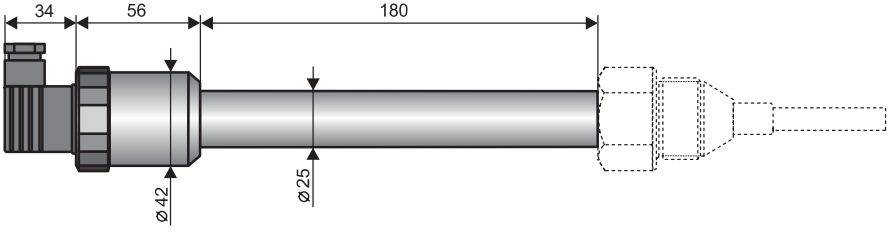

CLM–36_–32

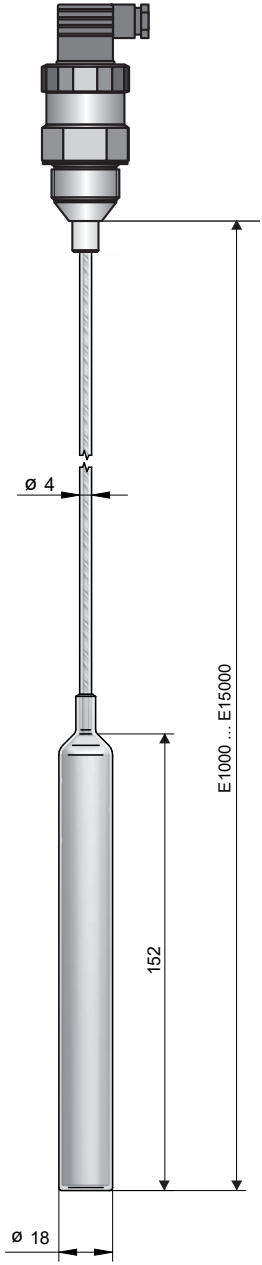

CLM–36_–31

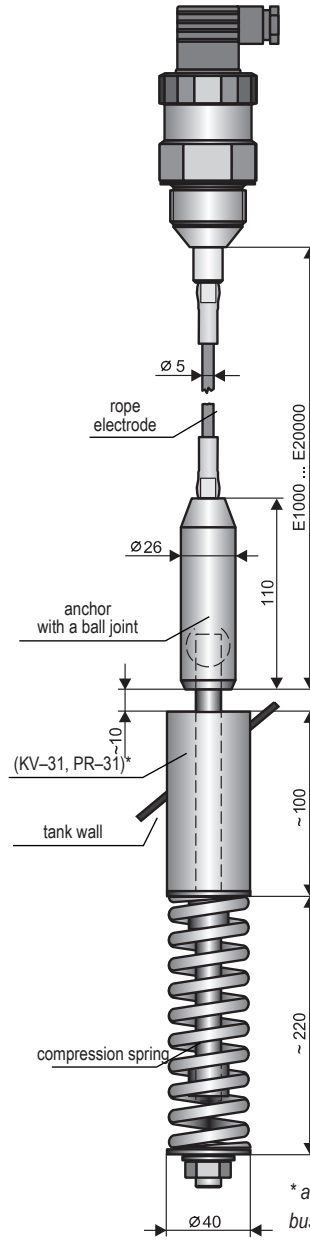

Tri-Clamp process connection

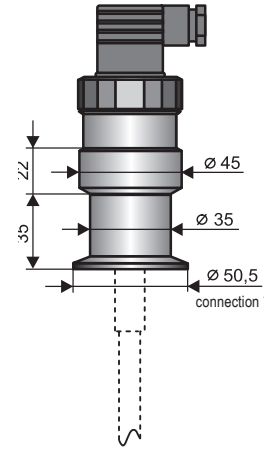

** anchoring roller KV–31 or dustproof bushing PR–31 (see accessories)*

*** connection types: Tri-Clamp CI50 (ø 50.5 mm)*

5. The influence of the shape of the tank on the linearity of the measurement

- For curved containers (most often a horizontal cylinder), the change in capacity when measuring electrically non-conductive substances is non-linear.

VALID FOR: CLM-36_-10, 11, 12
CLM-36_-30, 31, 32

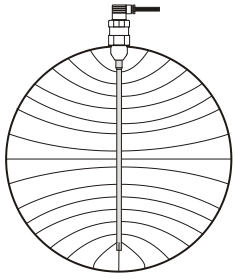

- Linearization is performed using a concentric reference tube (CLM – 36_–20, 22).

VALID FOR: CLM-36_-20, 22

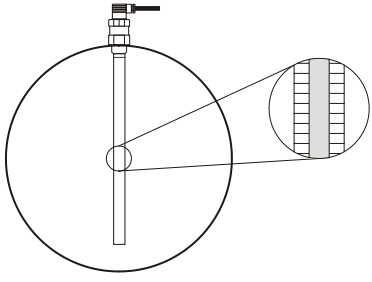

- For a tank with a straight wall and a probe placed parallel to it, the capacity change is linear.

VALID FOR: all types

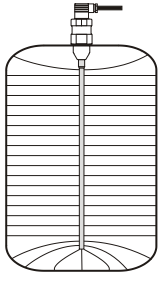

6. Commissioning procedure

This procedure has the following three steps:

- **Mechanical assembly - see chapter 7**
- **Electrical connection - see chapter 8**
- **Settings - see chapter 10**

7. Mechanical assembly

BASIC INFORMATION

- Level meters with an insulated electrode are equipped with a protective cap at the end of the electrode, which must be removed before assembly.
- The level meters are mounted in a vertical position in the upper lid of the tank or reservoir, for example, using a steel weld ON-36x2 (steel 11375), a stainless steel weld NN-36x2 (stainless steel 1.4301), a fastening nut UM-36x2 (stainless steel 1.4301) or a Clamp-type flange.
- When mounting the level meter in a metal tank or reservoir, it is not necessary to ground the housing separately.
- In the case of installation in concrete pits or silos, it is advisable to install the level meter on an auxiliary metal structure (console, lid, etc.) and then connect it to a metal object that is constantly submerged, or with steel reinforcements in concrete (reinforcement).
- When measuring the level of substances in plastic or glass containers with a level meter without a reference tube, it is necessary to connect the grounding screw on the sensor head with an auxiliary electrode, which is fixed in a suitable way to the outer shell of the container (or to the inner wall). The material of the auxiliary electrode should be chosen taking into account the working environment and the properties of the substance to be measured.

METAL AND NON-METAL CONTAINERS | ***VALID FOR: CLM-36_-10, 11, 12***

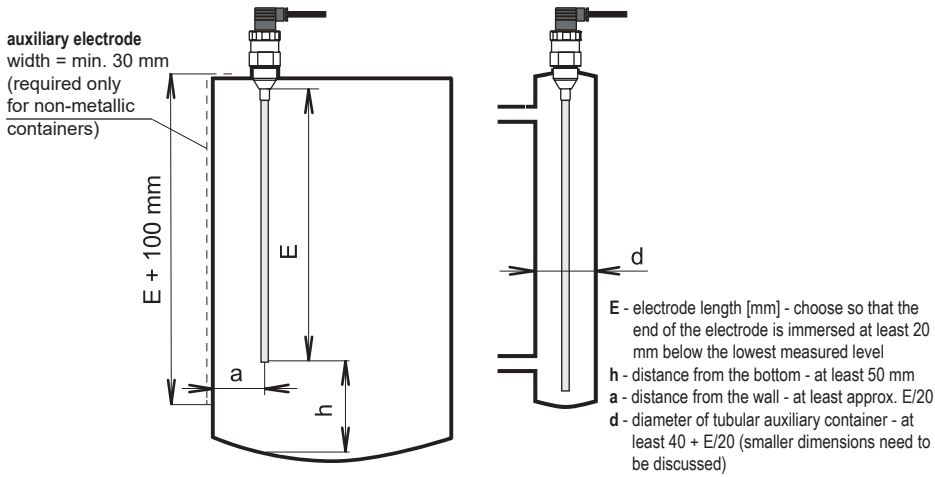

Fig. 1: Installation of level meters with a rod electrode

VARIANTS WITH REFERENCE TUBE

VALID FOR: CLM-36_-20, 22

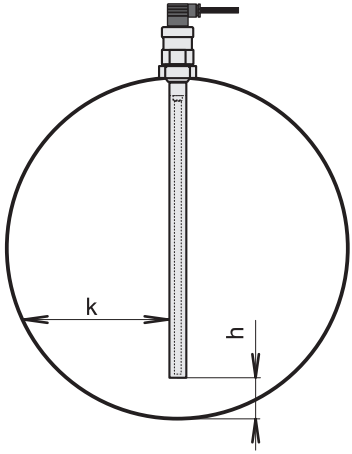

h - distance from the bottom - at least 50 mm, taking into account the possibility of the presence of heavier fractions (water) in oil products

k - distance from the wall - any

Fig. 2: Installation of level meter with reference pipe

DEEP METAL AND CONCRETE TANKS

VALID FOR: CLM-36_-30, 32

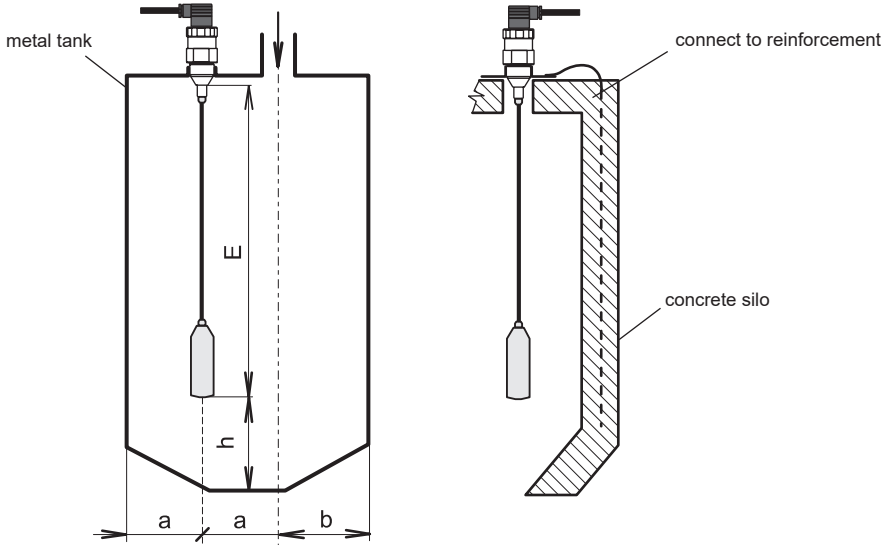

E - electrode length [mm] - choose so that the end of the electrode is at least 20 mm below the lowest measured level

h - distance from the bottom - at least 100 mm

a distance from the wall - min. E/20, otherwise choose the largest possible (farthest from the wall), in the middle between the wall and the vertical drain

Fig. 3: Installation of rope electrode level meters

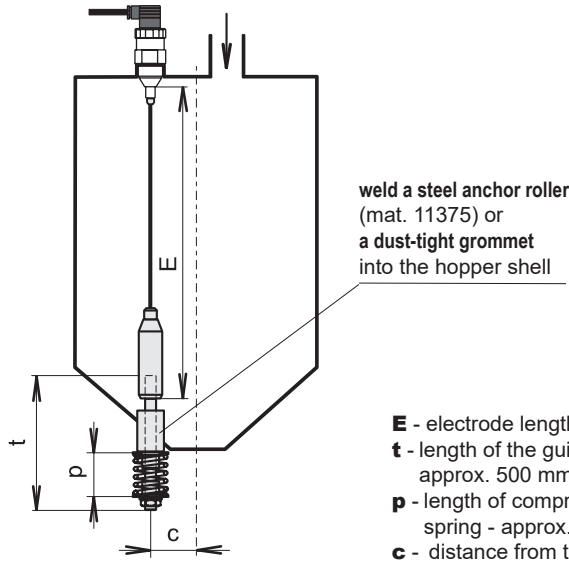

E - electrode length [mm]
t - length of the guide rod - approx. 500 mm
p - length of compression spring - approx. 200 mm
c - distance from the tray axis (choose the minimum if possible)

Fig. 4: Installation of the level meter with rope electrode and anchoring

8. Electrical connection

The level meter is connected to the evaluation device with a suitable cable with an outer diameter of 6 to 8 mm (recommended core cross-section 0.5 to 0.75 mm2) via a removable connector with internal screw terminals, which is included in the delivery. The connection diagram and the inside view of the connector are shown in the pictures. A non-detachable IP67 connector with a 5 m PVC cable can be supplied as an extra standard accessory.

Procedure for connecting the cable to the level meter:

1. Unscrew the connector from the body of the level meter using a suitable screwdriver.
2. Use a flat screwdriver to pull out the inner part of the connector (insert the screwdriver into the gap indicated by the arrow).
3. Unscrew the cable grommet and pass the supply cable inside the connector.
4. Connect the cable cores to the screw terminals according to Fig. 7 (current output 4-20 mA) or according to Fig. 9 (voltage output 0-10 V). Tighten the clamps firmly.
5. Push the terminals back into the connector with terminal #3 facing the cable gland. Tighten the cable gland.
6. Check the seal on the connector and connect the connector back to the meter body.

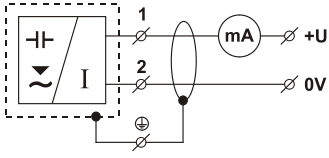

Fig. 6: Connection diagram of a level meter with current output

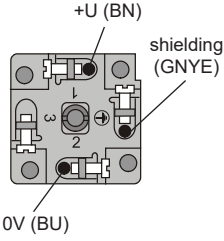

Fig. 7: Internal view of the connector with current output

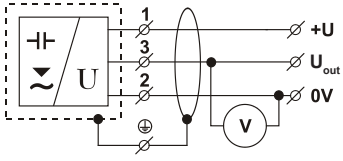

Fig. 8: Connection diagram of the level meter with voltage output

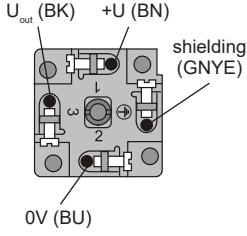

Fig. 9: Internal view of the connector with voltage output

The electrical connection can only be made in a de-energized state!

The supply voltage source must be designed as a stabilized source of low safe voltage with galvanic separation. In the case of using a switching source, it is necessary that its design effectively suppresses common mode interference on the secondary side. If the switching source is equipped with a protective PE terminal, it must be earthed! Intrinsically safe devices of the CLM–36Xi(XiT) type must be powered from an intrinsically safe source meeting the above requirements.

Due to the possible occurrence of an electrostatic charge on the non-conductive parts of the sensor, all CLM-36Xi(XiT) sensors intended for use in potentially explosive atmospheres must be grounded. This can be done by grounding the el. conductive tanks, or el. conductive lid of the tank and in the case of el. non-conductive tanks by using and grounding the auxiliary plate electrode PDE-27.

If the sensor is located in an outdoor environment at a distance of more than 20 m from an outdoor switchboard or from a closed building, the electrical supply to the sensor must be supplemented with suitable overvoltage protection.

In the case of strong ambient electromagnetic interference, the connection of the supply cable with the power line, or its length greater than 30 m, we recommend the use of a shielded cable and grounding its shielding on the source side.

9. Preparing the level meter for measurement

PREPARATION OF THE LEVEL METER

1. To access the adjustment elements of the level meter, we disconnect the connector and unscrew it union nut (pay attention to the internal connecting wires). We then connect the connector again.
2. We connect the level meter to the power source via a milliammeter (controller, etc.).
3. We set Trimr[1)] 20 mA (or 10 V) to the basic position (already preset from the factory):
   a) We turn it all the way to the right (clockwise).
   b) We go back 3 turns to the left.

LEVEL METER ADJUSTMENT ELEMENTS

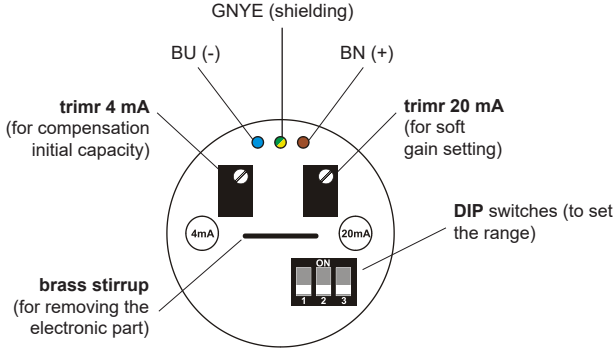

Fig. 10: Top view of the internal electronic part of the level meter with current output (variant –I)

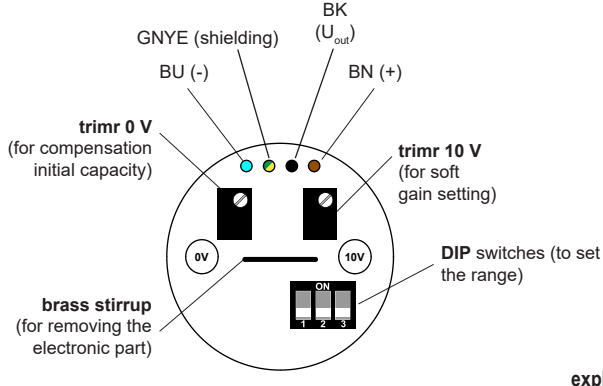

Fig. 11: Top view of the internal electronic part of the level meter with voltage output (variant –U)

explanations:
GNYE – green-yellow
BU – blue
BK – black
BU – blue

1) Trimrs do not have stops - they are about 15 revolutions.

 © Dinel, s.r.o.

10. Settings

CURRENT OUTPUT 4 ... 20 mA

1. Empty the tank to the minimum level.
2. Using the DIP switches on the level meter, we set the 2nd range[3)] (250 pF).
3. Using the adjusting screwdriver, we turn the 4 mA trimmer and set the quiescent current of the level meter to 4 mA. Turning it to the right (clockwise) increases the current, turning it to the left decreases it. If the desired current cannot be set to 4 mA, we switch to the next higher range using the DIP switches and set the 4 mA current to this range.
4. We fill the tank to the maximum level. If it is impossible to bring the level to the maximum state, any known (detectable) level can be used and the current for further settings can be calculated according to the formula:

$$I_{out} = 4 + (0{,}16 \times \text{water level in } \%) \quad [\text{mA}]$$

5. If the output current does not reach the value of 20 mA (or the value of I out), then we switch to the lowest range No. 1 using the DIP switches and continue with step 7. If the output current reaches or exceeds the value of 20 mA, we continue with step 6.
6. Using the DIP switches, we gradually switch to higher ranges and stop at the range where the last time the value exceeded 20 mA (or the I_{out} value), i.e. a current of 21 mA4) flows through the sensor. At the same time, we still have the 20 mA trimmer in the basic position.
7. Using the adjusting screwdriver, we turn the 20 mA trimmer and set the current with the level meter to 20 mA (or to the calculated value of I out - see above).
8. To achieve maximum accuracy, it is advisable to double-check the 4 mA setting.

VOLTAGE OUTPUT 0 ... 10 V

1. Empty the tank to the minimum level.
2. Using the DIP switches on the level meter, we set the 2nd range[3)] (250 pF).
3. Using the adjusting screwdriver, we turn the trimmer 0 V and set the voltage at the output of the level meter to 0 V. Turning it to the right (clockwise) increases the output voltage, turning it to the left decreases it. If the desired voltage cannot be set to 0 V, we switch to the nearest higher range using DIP switches and set the 0 V voltage to this range.
4. We fill the tank to the maximum level. If it is impossible to bring the level to the maximum state, any known (detectable) level can be used and the output voltage for further settings can be calculated according to the formula:

$$U_{out} = 0{,}1 \times \text{water level in } \% \quad [\text{V}]$$

5. If the output voltage does not reach the value of 10 V (or the value of U_{out}), then we switch to the lowest range No. 1 using the DIP switches and continue with step 7. If the output voltage reaches the value of 10 V, we continue with step 6.
6. Using the DIP switches, we gradually switch to higher ranges and stop at the range where the value last exceeded 10 V (or the value of U_{out}), so the voltage at the output of the sensor is e.g. 10.5 V. At the same time, we still have the 10 V trimmer in the basic position .

7. Using the adjusting screwdriver, we turn the 10 V trimmer and set the output voltage on the level meter to 10 V (or to the calculated value of U_{out} - see above).
8. To achieve maximum accuracy, it is advisable to check the 0 V setting.

Table of adjustable ranges

Range number	Sensitivity [2] (C)	Range [3] (R)	Position of DIP switches
1[1]	20 pF	70 pF	
2	30 pF	250 pF	
3	50 pF	600 pF	
4	100 pF	1 200 pF	
5	150 pF	3 000 pF	
6	300 pF	7 000 pF	
7	500 pF	18 000 pF	
8	1 000 pF	36 000 pF	

Tables of recommended ranges depending on the measured medium and type of level meter

Medium	Plastic granules (ε_r cca 2)				
Electrode type/length	**1 m**	**2 m**	**5 m**	**10 m**	**20 m**
10, 30, 31	1	2	2	3	4
Medium	**Flour, sand, grains (ε_r cca 3)**				
Electrode type/length	**1 m**	**2 m**	**5 m**	**10 m**	**20 m**
10, 30, 31	2	2	3	4	5
Medium	**Cement (ε_r cca 4)**				
Electrode type/length	**1 m**	**2 m**	**5 m**	**10 m**	**20 m**
10, 30, 31	2	2	3	4	5
Medium	**Water (aqueous solutions)**				
Electrode type/length	**1 m**	**2 m**	**5 m**	**10 m**	**20 m**
11, 12	3	4	5	x	x
22	3	4	x	x	x
32	3	4	5	6	6
Medium	**Gasoline, kerosene, diesel, oils (petroleum substances) (ε_r cca 2)**				
Electrode type/length	**1 m**	**2 m**	**5 m**	**10 m**	**20 m**
10, 30	1	2	2	3	4
20	3	4	x	x	x

 © Dinel, s.r.o.

Note: Types 10, 11, 12, 30, 31, 32 at a distance of approx. 250 mm from the conductive wall.
The indicated ranges are indicative. The specific range for a given electrode / tank configuration must be established directly in the application on the measured medium.

**1) Range No. 1 (70 pF) is very sensitive and we recommend using it only for level meters with a very short electrode (approx. up to 500 mm) and measured media with low permittivity.*
**2) Sensitivity - the minimum change in electrode capacity required to achieve an output range of 4 ÷ 20 mA, 0 ÷ 10 V.*
**3) Range = sum of head capacitance + flooded electrode capacitance to achieve an output range of 4 ÷ 20 mA, 0 ÷ 10 V. (Eg: uninsulated electrode 1000 mm flooded with gasoline: 20 pF + 30 pF, insulated electrode 1000 mm flooded with water: 20 pF + 500 pF)*
**4) In the event of a short circuit of the electrode to the housing or selection of a very sensitive range, the current of the level meter is limited to a maximum value of 30 mA.*

11. Method of marking

PRODUCT

CLM-36

IMPLEMENTATION

N	**areas without explosion hazard**
NT	**high temperature design**
Xi	**Ex into explosive areas**
XiT	**Ex high-temperature design for explosive areas**

ELECTRODE TYPE

10	rod non-insulated electrode, length 0.2 / 0.5 ... 5 m
11	rod insulated electrode (PFA insulation), length 0.2 ... 3 m
12	rod insulated electrode (FEP insulation), length 0.2 ... 3 m
20	rod uninsulated electrode with reference tube
22	rod insulated electrode with reference tube (FEP insulation)
30	rope non-insulated hanging electrode, length 1 ... 20 m
31	hanging non-insulated electrode with anchorage, length 1 ... 20 m
32	hanging electrode with insulated rope (FEP) and insulated weight (FEP), length 1 ... 15 m

PROCESS CONNECTION

M	thread M36x2
G1	thread G1"
CI50	Tri-Clamp (ø 50,5 mm)

OUTPUT TYPE

I	current (4 ... 20 mA)
U	voltage (0 ... 10 V)

ELECTRODE LENGTH

E	electrode length in mm

CLM-36 N - 10 - G1 - I - E1000 **POSSIBLE VARIANT OF THE PRODUCT CODE**

12. Examples of correct labeling

CLM–36N–10–G1–I E1000

(N) implementation into normal premises; **(10)** rod uninsulated electrode; **(G1)** process connection with thread G1"; **(I)** current output **(4 ... 20 mA); (E1000)** electrode length 1000 mm

CLM–36XiT–30–G1–I E9750

(XiT) high temperature implementation for explosive atmospheres; **(30)** rope non-insulated hanging electrode; **(G1)** process connection with G1" thread; **(I)** current output **(4 ... 20 mA); (E9750)** electrode length 9750 mm.

13. Accessories

standard (included)

- 1x seal (asbestos-free), other seals on request (PTFE, Al, etc.) *
- 1x connection connector
- 1x adjustment screwdriver (for every 5 pcs.)

* Pressure resistance see the table in the data sheet of the accessories in the range of seals.

optional (extra charge)

- connection connector with IP67 protection (type GAN-DADE 7A) with 5m cable (for current output)
- connection connector with IP67 protection (type GAN-DAEE 7A) with 5m cable (for voltage output)
- steel weld ON–36x2
- stainless steel weld NN–36x2
- fastening nut UM–36x2 (stainless steel)
- anchor roller KV–31 (only CLM–36–31)
- dustproof bushing PR–31 (CLM–36–31 only)

14. Protection, safety, compatibility and explosion proof

The level sensor is equipped with protection against breakdown voltage on the electrode, polarity reversal, short-term overvoltage and current overload at the output.

Protection against dangerous contact is ensured by a low safe voltage according to 33 2000-4-41. EMC is ensured by compliance with EN 55022 / B, EN 61326-1, EN 61000-4-2 to -6 standards.

The explosion-proof design of the CLM–36Xi(XiT) is ensured by compliance with the standards EN IEC 60079-0:2018, EN 60079-11:2012.

CLM–36Xi(XiT) explosion proof is certified by FTZÚ – AO 210 Ostrava – Radvanice: FTZÚ 02 ATEX 0235X.

A declaration of conformity was issued for this device in accordance with Act 90/2016 Coll. and later changes. The supplied electrical equipment meets the requirements of the applicable government safety regulations and electromagnetic compatibility.

Special conditions for the safe use of the CLM-36Xi (XiT) variant

The connected intrinsically safe device must be galvanically isolated, or in the case of using a device without galvanic isolation (Zener barriers), it is necessary to equalize the potentials between the sensor and the grounding point of the barriers.

The CLM-36Xi version can be placed in zone 0 or zone 20. With the CLM-36XiT version, only the

electrode part and the head with electronics can be placed in zone 0 and in zone 20, then in zone 1 or zone 21. The maximum temperature of the electrodes is equal to the temperature measured substances.
Temperature classes and maximum surface temperatures depend on the temperature of the medium.

Xi version:
Temperature classes for EPL Ga:
T2 ... applies to the maximum temperature of the medium Tm = 275°C.
T3 ... applies to the maximum temperature of the medium Tm = 180°C.
T4 ... applies to the maximum temperature of the medium Tm = 115°C.
T5 ... applies to the maximum medium temperature Tm = 80°C.
Maximum surface temperature for EPL Da:
The temperature range of the medium is -40°C to 200°C.
The maximum surface temperature must be calculated as T_{200} = Tm + 40 °C.

XiT version
Temperature classes for EPL Ga/Gb:
T2 ... applies to the maximum temperature of the medium Tm = 275°C.
T3 ... applies to the maximum temperature of the medium Tm = 180°C.
T4 ... applies to the maximum temperature of the medium Tm = 115°C.
T5 ... applies to the maximum medium temperature Tm = 80°C.
Temperature classes for EPL Da/Db:
The temperature range of the medium is -40°C to 250°C.
The maximum surface temperature for the EPL Da part of the product must be calculated as
T_{200} = Tm + 40°C.
The maximum surface temperature for the EPL Db part of the product must be calculated as
T = Tm + 15°C.

For explosive dust atmospheres, the equipment must be installed in such a way as to avoid the risk of creeping discharges on the label, cable gland or connector of the equipment.

15. Use, operation and maintenance

The level meter does not require any operator to operate. During operation, the operator of the technological unit is informed about the height of the level of the measured substance using a follow-up display device.

LEVEL METER MAINTENANCE

Device maintenance consists in checking the integrity of the level meter and the supply cable. Depending on the nature of the measured substance, we recommend checking the measuring electrode of the capacitive level meter at least once a year. If any visible defects are detected, it is necessary to immediately contact the manufacturer or seller of the device.

⚠ **The device must be installed so that there is no tensile overload of the cable electrode of the level meter, see Technical parameters.**

⚠ **It is forbidden to make any changes or interventions on the CLM-36 level meter without the manufacturer's consent. Any repairs to mechanical damage to the level meter must only be carried out**

by the manufacturer or a service organization authorized by him.

Assembly, installation, commissioning, operation and maintenance of the CLM-36 level meter must be carried out in accordance with this manual and the provisions of the applicable standards for the installation of electrical equipment must be observed.

REPLACEMENT OF ELECTRONIC MODULE

If necessary, it is possible to replace the electronic module with a new one directly on the installed level meter (without the need for disassembly) according to the following procedure:

1. We disconnect the connector and unscrew the cover nut (pay attention to the internal connecting wires).
2. Using pliers, grasp the electronic module by the brass stirrup and pull it out of the level meter housing.
3. We check the location of the white sealing O-ring in the head and on the pressure ring.
4. We insert the repaired or new electronic module into the housing of the level meter and push it in using the pressure ring (we make sure that the contact pin is slightly open before insertion and that the contact springs are not pressed below the level of the electronics casing).
5. We check the location of the black sealing O-ring on the connector.
6. We screw back the union nut (pay attention to the connecting wires) and connect the connector.

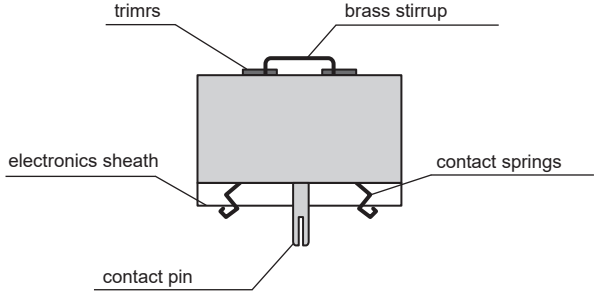

Fig. 12: Side view of the electronic level meter module

PROCEDURE FOR SHORTENING THE MEASURING ELECTRODE FOR VARIANT 30

1. For the rope electrode, the three fixing screws on the weight must be loosened and the end of the rope pulled out, see Figure 13.
2. Make sure that the length of the rope after shortening is correct - the rope is embedded in the weight to a distance of approximately 60 mm. Shortening of the rope should preferably be carried out with the help of a pair of side cutters. Take care not to fray the end of the rope.
3. Reinsert the end of the rope into the weight and secure it by tightening all three screws.

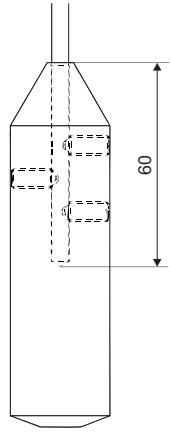

Fig. 13: Drawing of the rope electrode weights

16. General warranty conditions

The manufacturer guarantees from the delivery date that this product will have the specified properties specified in the technical conditions for a period of 3 years.

The manufacturer is responsible for defects that were detected during the warranty period and were complained about in writing.

The warranty does not cover defects caused by incorrect handling or non-compliance with technical conditions.

The warranty expires if the customer or a third party makes changes or modifications to the product, if the product is mechanically or chemically damaged, or if the serial number is illegible.

To make a claim, you need to present a warranty card.

In the event of a valid complaint, we will repair the defective product or replace it with a new one. In both cases, the warranty period is extended by the time of the repair.

17. Marking labels

Data on the level meter label **CLM–36N(T)–_ _–_–I:**

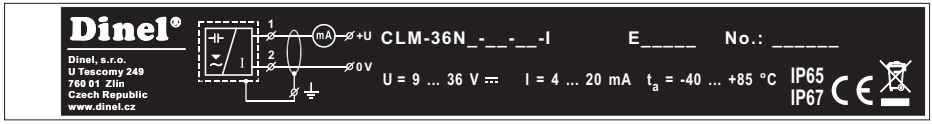

manufacturer's mark: Dinel® logo
manufacturer contact: Dinel, s.r.o., Zlín, Czech Republic, www.dinel.cz, dinel@dinel.cz
connection diagram and marking of wires: +U, 0V, GND
level meter type: CLM-36-N_-_-_-I, incl. electrode length: E in mm
product serial number: Ser. No.: _____ - (from left: year of manufacture, serial serial number)
supply voltage: U = 9 ÷ 36 V DC
output current range: I = 4 ÷ 20 mA
working temperature range of the head: ta = -40 ... +85 °C
protection: IP 65 / IP 67
compliance mark: CE; sign for the return of electronic waste:

Data on the level meter label **CLM–36N(T)–_ _–_–U:**

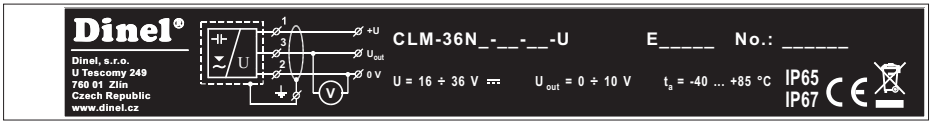

manufacturer's mark: Dinel® logo
manufacturer contact: Dinel, s.r.o., Zlín, Czech Republic, www.dinel.cz, dinel@dinel.cz
connection diagram and marking of wires: +U, 0V, Uout, GND
level meter type: CLM-36-N_-_-_-U, incl. electrode length: E in mm
product serial number: Ser. No.: _____ - (from left: year of manufacture, serial serial number)
supply voltage: U = 16 ÷ 36 V DC
output voltage range: U = 0 ÷ 10 V
working temperature range of the head: ta = -40 ... +85 °C
protection: IP 65 / IP 67
compliance mark: CE; sign for the return of electronic waste:

Data on the level meter label **CLM–36Xi (XiT):**
for electrode types 10, 20, 30, 31

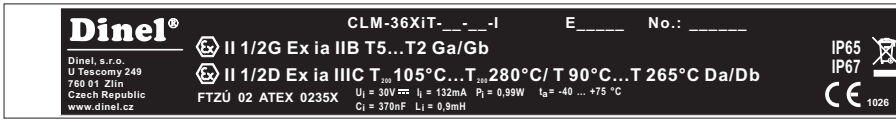

pro typy elektrod 11, 12, 22, 32

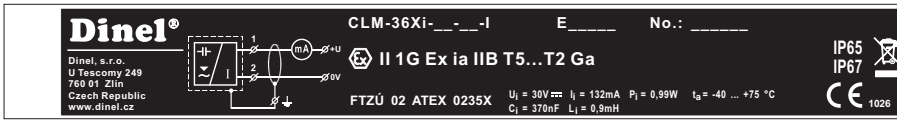

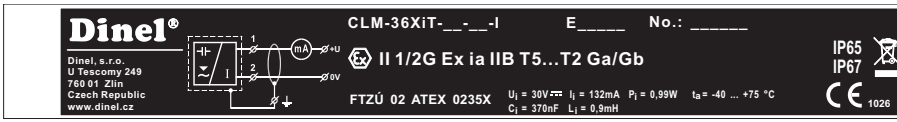

manufacturer's mark: Dinel® logo
manufacturer contact: Dinel, s.r.o., Zlín, Czech Republic, www.dinel.cz, dinel@dinel.cz
connection diagram and marking of wires: +U, 0V, GND
level meter type: CLM-36-Xi(XiT)-__-_, incl. electrode length: E in mm
product serial number: Ser. No.: _____ - (from left: year of manufacture, serial serial number)
non-explosive equipment mark: Ex in hexagon
execution:
- II 1 G Ex ia IIB T5...T2 Ga,
- II 1 D Ex ia IIIC T_{200} 115°C...T_{200} 240°C Da
- II 1/2 G Ex ia IIB T5...T2 Ga/Gb,
- II 1/2 D Ex ia IIIC T_{200} 105°C...T_{200} 280°C/ T90°C...T 265°C Da/Db

spark safety certificate number: FTZÚ 02 ATEX 0235X
operating parameters: Ui = 30 V DC, Ii = 132 mA, Pi = 0.99 W, Ci = 370 nF, Li = 0.9 mH
working temperature range of the head: ta = -40 ... +75 °C
protection: IP 65 / IP 67
compliance mark: CE; number of the authorized person supervising the quality system: 1026
E-waste take-back label:

The size of the labels is 135 x 17 mm, the size shown does not correspond to reality.

18. Technical parameters

Basic technical data (version N, NT)

Power voltage	CLM–36N(T)–_ _–_–I CLM–36N(T)–_ _–_–U	9 ... 36 V DC 16 ... 36 V DC
Current output Voltage output		4 ... 20 mA 0 ... 10 V *
Consumption (no-load voltage output) CLM–36N(T)–_ _–_–U		cca. 8mA
Sensitivity ranges		20; 30; 50; 100; 150; 300; 500; 1000 pF
Initial capacity regulation range		min. 1:2
Non-linearity		max. 1 %
Temperature error		max. 0,05 % / K
Voltage error for current and voltage output		max. 0,3 µA / V a 0,1 mV / V
Input Resistance / Electrical Strength (Electrode - Case)		1 MΩ / 250 V AC
Separation capacity / electrical strength (case - power leads)		51 nF / 250 V AC
Cover	standard optional (GAN-DADE 7A or GAN-DAEE 7A connector)	IP67 (header), IP65 (connector) IP67
Maximum load resistance of the current output (at U = 24 V)		R_{max}= 750 Ω
Minimum load resistance of the voltage output		R_{min} > 1 kΩ
Maximum weight load of the electrode rope		1400 kg**
Recommended cable		PVC 2x0,75 mm² (3x 0,5 mm²)
Weight (without electrode)	design N, Xi execution of NT, XiT	about 0.5 kg about 1 kg

*) *On request, it is possible to produce another type of output (e.g. 0 - 5V)*

**) *All ropes, except the rope for type CLM-36-32 (maximum load 10 kg).*

Electrical parameters (version Xi, XiT)

Power voltage	9 ... 30 V DC
Limit values	U_i = 30 V DC; Ii = 132 mA; P_i = 0,99 W; Ci = 370 nF; L_i = 0,9 mH
Input resistance / electrical strength (electrode - housing)	1 MΩ / 250 V AC
Separation capacity / electrical strength (case - power leads)	26 nF / 500 V AC

Process connection

type	dimension	designation
Metric thread	M36 x 2	M
Pipe thread	G 1"	G
Seamless connection (Tri-Clamp)	ø 50,5 mm	CI50

Material design

part of the sensor	type variant	standard material*
Head (case)	all except the Tri-Clamp connection Tri-Clamp connection	stainless steel W. Nr. 1.4301 (AISI 304) stainless steel W.Nr. 1.4404 (AISI 316 L)
Insulating grommet	all	PTFE
Electrode	CLM – 36_–10, 11, 12, 20, 22 CLM – 36_–30, 31, 32	stainless steel W.Nr. 1.4404 (AISI 316 L) stainless steel W.Nr. 1.4401 (AISI 316)
Electrode insulation	CLM – 36_–12, 22, 32 CLM – 36_–11	FEP PFA
Weight isolation	CLM – 36_–32	FEP
Weight / anchor mechanism	CLM – 36_–30, 31, 32	stainless steel W. Nr. 1.4301 (AISI 304)
0eference tube	CLM – 36_–20, 22	stainless steel W. Nr. 1.4301 (AISI 304)

** It is always necessary to verify the chemical compatibility of the material with the measured medium. Another type of material can also be chosen by agreement.*

Mechanical design and classification of premises (ČSN EN 60079-0, ČSN EN 60079-10-1(2))

CLM – 36N	Basic design for use in areas without explosion hazard.
CLM – 36NT	High temperature design for use in areas without explosion hazard.
CLM – 36Xi (10, 20, 30, 31)	Intrinsically safe design for use in hazardous areas (explosive gas atmospheres or explosive atmospheres with dust) Ex II 1 G Ex ia IIB T5...T2 Ga; Ex II 1 D Ex ia IIIC T_{200} 115°C...T_{200} 240°C Yes with intrinsically safe power supply unit, entire sensor zone 0 and 20.
CLM – 36Xi (11, 12, 22, 32)	Intrinsically safe design for use in hazardous areas (explosive gas atmospheres) Ex II 1 G Ex ia IIB T5...T2 Ga with intrinsically safe power supply unit, entire sensor zone 0.
CLM – 36XiT (10, 20, 30, 31)	Intrinsically safe high-temperature design for use in hazardous areas (explosive gas atmospheres or explosive atmospheres with dust) Ex II 1/2 G Ex ia IIB T5...T2 Ga/Gb; Ex II 1/2 D Ex ia IIIC T_{200} 105°C...T_{200} 280°C/ T90°C...T 265°C Da/Db with intrinsically safe power supply unit, electrode part zone 0 and 20, head zone 1 and 21.
CLM – 36XiT (11, 12, 22, 32)	Intrinsically safe high-temperature design for use in hazardous areas (explosive gas atmospheres) Ex II 1/2 G Ex ia IIB T5...T2 Ga/Gb with intrinsically safe power supply unit, electrode part zone 0, head zone 1.

A device or part of it designed for zone 0 can also be used in zone 1 or 2.
The device or its part intended for zone 1 can also be used in zone 2.
The device or its part intended for zone 20 can also be used in zone 21 or 22.
The device or its part intended for zone 21 can also be used in zone 22.

Maximum temperature of the medium for the Xi(XiT) version of category 1G, 1/2G	
temperature class	temperature dark
T5	+80 °C
T4	+115 °C
T3	+180 °C
T2	+275 °C

MAXIMUM SURFACE TEMPERATURE OF XI(XIT) CATEGORY 1D, 1/2D EQUIPMENT	
in place of the head with electronics	T_{200}=Tm + 40 °C (version Xi) | T=Tm + 15 °C (version XiT)
at the point of process connection	T_{200}=Tm + 40 °C (version Xi) | T=Tm + 15 °C (XiT)
on the electrode	T_{200}=Tm + 40 °C

Temperature resistance

design variant	temperature **tm**	temperature **tp**	temperature **ta**
CLM–36N–10, 20	-40 °C ... +300 °C	-40 °C ... +85 °C	-40 °C ... +85 °C
CLM–36N–11, 12, 22	-40 °C ... +200 °C	-40 °C ... +85 °C	-40 °C ... +85 °C
CLM–36N–30	-40 °C ... +200 °C	-40 °C ... +85 °C	-40 °C ... +85 °C
CLM–36N–31 (vč. PR–31)	-40 °C ... +130 °C	-40 °C ... +85 °C	-40 °C ... +85 °C
CLM–36N–31 (vč. KV–31)	-40 °C ... +250 °C	-40 °C ... +85 °C	-40 °C ... +85 °C
CLM–36N–32	-40 °C ... +200 °C	-40 °C ... +85 °C	-40 °C ... +85 °C
CLM–36Xi–10, 20	-40 °C ... +200 °C	-40 °C ... +75 °C	-40 °C ... +75 °C
CLM–36Xi–11, 12, 22	-40 °C ... +120 °C	-40 °C ... +75 °C	-40 °C ... +75 °C
CLM–36Xi–30	-40 °C ... +105 °C	-40 °C ... +75 °C	-40 °C ... +75 °C
CLM–36Xi–31 (vč. PR–31)	-40 °C ... +105 °C	-40 °C ... +75 °C	-40 °C ... +75 °C
CLM–36Xi–31 (vč. KV–31)	-40 °C ... +105 °C	-40 °C ... +75 °C	-40 °C ... +75 °C
CLM–36Xi–32	-40 °C ... +105 °C	-40 °C ... +75 °C	-40 °C ... +75 °C
CLM–36NT–10, 20	-40 °C ... +300 °C	-40 °C ... +200 °C	-40 °C ... +85 °C
CLM–36NT–11, 12, 22	-40 °C ... +200 °C	-40 °C ... +200 °C	-40 °C ... +85 °C
CLM–36NT–30	-40 °C ... +250 °C	-40 °C ... +130 °C	-40 °C ... +85 °C
CLM–36NT–31 (vč. PR–31)	-40 °C ... +130 °C	-40 °C ... +130 °C	-40 °C ... +85 °C
CLM–36NT–31 (vč. KV–31)	-40 °C ... +250 °C	-40 °C ... +130 °C	-40 °C ... +85 °C
CLM–36NT–32	-40 °C ... +200 °C	-40 °C ... +200 °C	-40 °C ... +85 °C
CLM–36XiT–10, 20	-40 °C ... +200 °C	-40 °C ... +200 °C	-40 °C ... +75 °C
CLM–36XiT–11, 12, 22	-40 °C ... +120 °C	-40 °C ... +200 °C	-40 °C ... +75 °C
CLM–36XiT–30	-40 °C ... +250 °C	-40 °C ... +130 °C	-40 °C ... +75 °C
CLM–36XiT–31 (vč. PR–31)	-40 °C ... +130 °C	-40 °C ... +130 °C	-40 °C ... +75 °C
CLM–36XiT–31 (vč. KV–31)	-40 °C ... +250 °C	-40 °C ... +130 °C	-40 °C ... +75 °C
CLM–36XiT–32	-40 °C ... +200 °C	-40 °C ... +200 °C	-40 °C ... +75 °C

Note: For the correct functioning of the level meter, none of the specified temperature ranges (tp, tm or ta) must be exceeded.
1) The indicated temperatures are clearly explained in Fig. 14

 © Dinel, s.r.o.

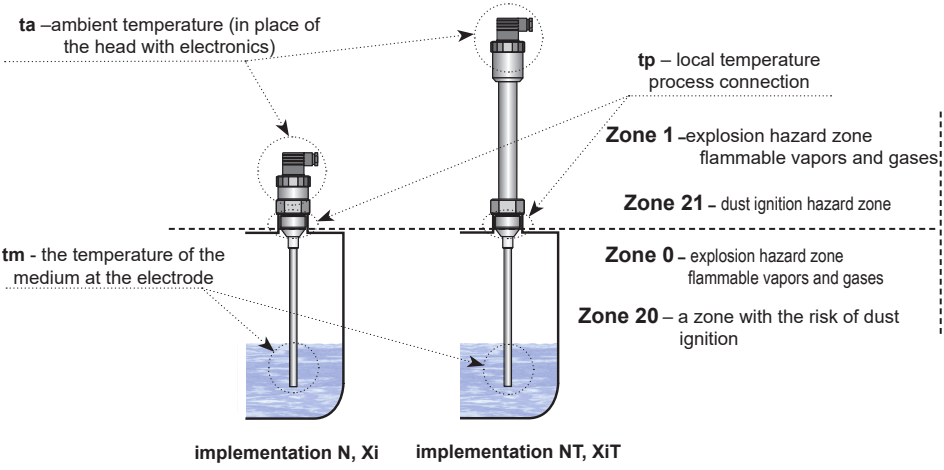

Fig. 14: Points for determining temperatures on the level meter

Pressure resistance

design variant	maximum overpressure for temperature tp				
	to 30 °C	to 85 °C	to 130 °C	to 160°C	to 200 °C
CLM–36N–10, 20	7 MPa	5 MPa	–	–	–
CLM–36N–11, 12, 22	4 MPa	2 MPa	–	–	–
CLM–36N–30	7 MPa	5 MPa	–	–	–
CLM–36N–31	–	–	–	–	–
CLM–36N–32	1 MPa	0,5 MPa	–	–	–
CLM–36Xi–10, 20	7 MPa	5 MPa	–	–	–
CLM–36Xi–11, 12, 22	4 MPa	2 MPa	–	–	–
CLM–36Xi–30	7 MPa	5 MPa	–	–	–
CLM–36Xi–31	–	–	–	–	–
CLM–36Xi–32	1 MPa	0,5 MPa	–	–	–
CLM–36NT–10, 20	7 MPa	5 MPa	3 MPa	2 MPa	1 MPa
CLM–36NT–11, 12, 22	6 MPa	4 MPa	2 MPa	1,5 MPa	0,3 MPa
CLM–36NT–30	7 MPa	5 MPa	3 MPa	–	–
CLM–36NT–31	–	–	–	–	–
CLM–36NT–32	1 MPa	0,5 MPa	0,2 MPa	–	–
CLM–36XiT–10, 20	7 MPa	5 MPa	3 MPa	2 MPa	1 MPa
CLM–36XiT–11, 12, 22	6 MPa	4 MPa	2 MPa	1,5 MPa	0,3 MPa
CLM–36XiT–30	7 MPa	5 MPa	3 MPa	–	–
CLM–36XiT–31	–	–	–	–	–
CLM–36XiT–32	1 MPa	0,5 MPa	0,2 MPa	–	–

19. Table of relative permittivity

Material	ε_r	Material	ε_r
Acetone	19,5 ÷ 21,4	Marble	9,3 ÷ 11,6
Acetylene tetrachloride	8,1	Diesel	2,1÷ 2,2
Aminoplasts	5 ÷ 8	Nitrobenzene	35,7
Ammonia	15 ÷ 24	Oil (mineral, lubricating)	2,0 ÷ 2,2
Aniline	6,9	Rapeseed oil	2,8
Benzaldehyde	18,3	Organic glass	3 ÷ 3,6
Benzene	2,28 ÷ 2,3	Ortonitrotoluene	27,4
Benzine	2,0 ÷ 2,2	Paper	1,6 ÷ 2,6
Benzol	2,3	Paraffin	1,6
Celluloid	3,5 ÷ 6,2	Kerosene	2,0 ÷ 2,2
Cement	4	Sand	3,0 ÷ 5,0
Sugar	3	Polyacetal	3,6 ÷ 3,7
Dioxane	2,235	Polyamide - PA	4,0 ÷ 5,0
Dry wood	2 ÷ 6	Polydichlorostyrene	2,7
Wet wood	10 ÷ 30	Polyetereterketon - PEEK	3,2
Ebonite	2,5 ÷ 5	Polyeterimid - PEI	3
Ethanol	24	Polyethylen - PE	2,16
Ethyl acetate	6	Polyfenylensulfid - PPS	3,3
Ethylene glycol	38,7	Polymethylmethacrylate	2,6
Ethylene chloride	10,5	Polypropylene - PP	2,0 ÷ 2,2
Freon R22	6,1	Polypropylene - PP (granules)	1,5
Glycerine	47	Polysulfone - PSU	3
Hexan	1,9	Polytetrafluoretylen - PTFE	2,0 ÷ 2,1
Liquid chlorine	2	Polyvinylacetate	2,7
Chloroform	4,8	Polyvinylchlorid - PVC	3,1 ÷ 3,4
Amber	2,9	Polyvinylidenfluorid - PVDF	6,0 ÷ 7,4
Quartz crystal	4,5	Ash	1,5 ÷ 1,7
Fused quartz	3,7	Porcelain	4,5 ÷ 7
Liquid carbon dioxide	1,6	Liquid propane	1,6 ÷ 1,9
Ice	3,1	Acrylic resin	2,4 ÷ 4,5
Smoothed cardboard	3,5	Epoxy resin	2,5 ÷ 8,0
Metanol	33	Phenolic resin	4,0 ÷ 12,0
Mikanite	4,5 ÷ 6	Melamine resin	4,7 ÷ 10,2
Monochlorbenzene	4	Urea resin	5,0 ÷ 8,0
Flour	2,5 ÷ 3,0	Polyester resin	2,8 ÷ 8,1

 © Dinel, s.r.o.

Material	ε_r
Styrene resin	2,3 ÷ 3,4
Rubber	2,0 ÷ 6,0
Pyridine	13,6
Silicone rubber	2,8 ÷ 3,3
Sulfur	3,4 ÷ 3,6
Glass	3,7 ÷ 10
Silicate glass	16
Mica	5 ÷ 8
Table salt (NaCl)	6
Milk powder	3,5 ÷ 4
Toluene	2,3 ÷ 2,4

Material	ε_r
Trichloretylene	3,3
Trolitul	2 ÷ 2,6
Reinforced fabric	2 ÷ 6
Vaseline	2,2 ÷ 2,9
Water	81
Water emulsion (with oil)	25
Aqueous solutions	50 ÷ 80
Wax	1,9 ÷ 2,5
White beeswax	2 ÷ 2,9
Liquid air	1,5
Grain	3,0 ÷ 5,0

20. Packaging, shipping and storage

The CLM–36 device is packed in a polyethylene bag and the entire shipment is placed in a cardboard box. In the cardboard box, suitable filling is used to prevent mechanical damage during transport.

Remove the device from its packaging before using it, this will prevent possible damage.

Transport to the customer is carried out by a forwarding company. Upon prior agreement, personal collection of the ordered goods at the company headquarters is also possible. Upon receipt, please check whether the shipment is complete and corresponds to the scope of the order, or whether the package and equipment were not damaged during transportation. Do not use equipment that is obviously damaged in transit, but contact the manufacturer to resolve the situation.

If the device will be transported further, then only packed in the original packaging and protected against shocks and weather effects.

Store the device in its original packaging in dry areas, protected from the weather, with a humidity of up to 85% without the effects of chemically active substances. The storage temperature range is -10°C to +50°C.

⚠ **All level meters, except for the type variants CLM–36_–30, 31, 32, are equipped with protective caps on the ends of the electrodes (longer than 100 mm) and reference tubes to prevent damage to the end of the electrode, tearing of the packaging or injury to persons handling it. Remove the caps before commissioning!**

Note

Dinel, s.r.o.
U Tescomy 249
760 01 Zlín
Czech Republic

phone: +420 577 002 003
e-mail: sale@dinel.cz

www.dinel.cz

The manufacturer reserves the right to change the specifications and appearance of the product without prior notice.

The latest version of the manual can be found at www.dinel.cz

*version:*01/2023

QMS
ISO 9001